Altamonte Springs
SCIENCE
INCUBATOR

Name: _____
Date: _____

Tour of Altamonte Springs Regional Water Reclamation Facility

Middle School Earth Science | Fall Module 3 | Regional Water Reclamation Facility

NGSSS Big Idea: Big Idea 2—The Characteristics of Scientific Knowledge

Benchmark Code & Description:

SC.6.N.1.1, SC.7.N.1.1, SC.8.N.1.1—Define a problem from your curriculum, use appropriate reference materials to support scientific understanding, plan and carry out scientific investigation of various types, such as systematic observations or experiments, identify variables, collect and organize data, interpret data in charts, tables, and graphics, analyze information, make predictions, and defend conclusions.

SC.6.N.2.3—Recognize that scientists who make contributions to scientific knowledge come from all kinds of backgrounds and possess varied talents, interests and goals.

LEARNING GOAL/OBJECTIVE

Students will learn how scientists designed a system to reduce impacts to the environment of a basic human function and turn a waste product into a resource.

PREREQUISITES

Review:

- Applicable Textbook Sections
- Process Diagram
- RWRF Safety Rules (see Support Materials)

VOCABULARY

See vocabulary sheet.

HANDS-ON ACTIVITY

Task(s):

- Tour of the Regional Water Reclamation Facility

Provided Materials:

- Clipboard
- Process diagram

Career Options: Engineer (BS Degree), Operator (High School Diploma and Certification), Mechanic (Certification), Electrician (Certification), Instrumentation Specialist (Certification)

Lesson Steps:

1. Students are shown the SCADA system.
2. Discuss responsibilities, job description and educational requirements of operators.
3. Tour students around the water reclamation facility.
4. Each student will have a clipboard a process diagram. The students can refer to this during the tour to answer questions.
5. Questions will be encouraged at all times.

Altamonte Springs
SCIENCE
INCUBATOR

Regional Water Reclamation Facility Earth Science Vocabulary List

Activated Sludge—small clumps of organisms that grow in wastewater. It's called "activated" because the particles are alive with microorganisms.

Aeration—combining air with a liquid.

Aerobic—to need oxygen.

Aerobic Digestion—the process of stabilizing sludge.

Anaerobic—not needing oxygen.

Biosolids—solids that have been treated enough to become fertilizer.

Clarifier—a tank that lets the solids settle to the bottom.

Disinfection—the process of killing or disabling pathogenic organisms.

Effluent—treated wastewater ("reclaimed water") leaving the plant.

Influent—wastewater flowing into the wastewater treatment facility.

Microbe/Microorganism—microscopic organisms that can be either single-cell or multi-cell.

MLSS (Mixed Liquor Suspended Solids)—the mixture of solids and water in the aeration tank.

Nutrients—elements necessary for organisms to live and grow (including carbon, nitrogen, phosphorus).

Preliminary Treatment—the first treatment process that removes larger particles and heavier grit particles (sand, gravel, metal or glass).

Reclaimed Water—treated wastewater that can be used for a beneficial purpose.

Sand Filters—filtration through sand.

SCADA—computer system that monitors pumps, motors and plant processes.

Secondary treatment—the third process in the treatment plant that includes the aeration tanks and secondary clarifiers. The wastewater is treated by microorganisms in the aeration tank then are removed (settle to the bottom) in the clarifier.

Wastewater—water that has been used for purposes such as bathing, cooking, washing clothes, toilets, etc.

Water Reclamation—the physical, chemical and biological process of removing contaminants from wastewater to produce a reusable water source.

ALTAMONTE SPRINGS WATER RECLAMATION FACILITY

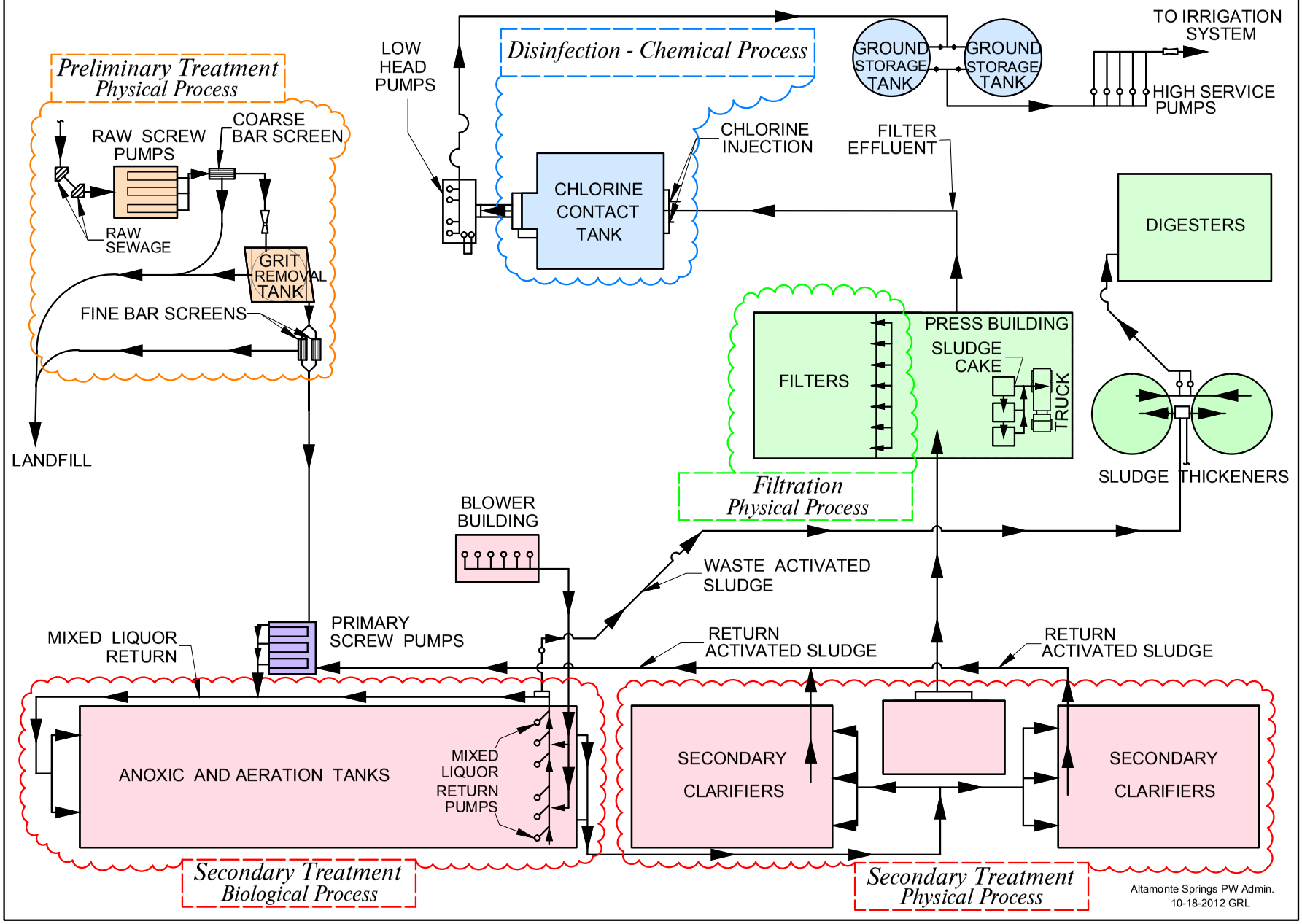

Altamonte Springs
SCIENCE
INCUBATOR

Name: _____

Date: _____

Regional Water Reclamation Facility Earth Science Quiz

Read each question carefully and circle the correct answer.

1. What is the purpose of a clarifier?
   a. To disinfect water
   b. To heat water
   c. To allow solids to settle out

2. What makes the rotten egg smell?
   a. Chlorine
   b. Hydrogen sulfide
   c. Dirty rags

3. Why do we use reclaimed water?
   a. To ruin the environment
   b. To conserve water resources
   c. To drink

4. Why are plant operators necessary?
   a. To operate and maintain equipment and processes
   b. To hand crank pumps
   c. For your tour

5. Why are bar screens important?
   a. To remove grit
   b. To remove rags, stick, leaves, braches and protect other equipment
   c. For disinfection

6. What is grit?
   a. Large branches
   b. Bugs
   c. Heavy particles such as metal, rocks and sand

7. What does a lift station do?
   a. Treats the wastewater
   b. Pumps wastewater uphill
   c. Produces grit

8. The wastewater plant uses gravity to accomplish many tasks.
    a. True
    b. False

9. How much water is in "wastewater"
    a. 30%
    b. 68%
    c. 99.9%

10. What is wastewater?
    a. Water that gets wasted during every day activities
    b. Water to drink
    c. Water from a pool

11. What does DO stand for?
    a. Dead organism
    b. Dissolved oxygen
    c. Door open

12. What is the difference between reclaimed water and the water you drink?
    a. $100
    b. Not much, a few more processes and they are the same!
    c. Reclaimed could never be used for drinking water

13. Drinking water is also called what?
    a. Delicious
    b. Coke
    c. Potable

14. How does the wastewater get to the plant?
    a. Large propellers
    b. Lift stations
    c. Gravity

15. What does "anoxic" mean?
    a. Filled with oxygen
    b. Filled with helium
    c. Lacking free dissolved oxygen

16. What are "biosolids"?
    a. Lifelike paintings
    b. Solids that are processed for beneficial reuse
    c. Bio-engineered bugs

17. What is the primary purpose of wastewater treatment?
    a. To provide water that can be used for a beneficial reason
    b. To provide water for swimming pools
    c. To provide water for the Little Wekiva River

18. Which stage of treatment kills or disables the microorganisms?
    a. Primary
    b. Disinfection
    c. Secondary

19. Inorganic substances contain carbon.
    a. True
    b. False

20. Each stage of treatment consists of physical, chemical or biological treatment.
    a. True
    b. False

21. What test lets the operator know that the disinfection process was successful?
    a. Breathalyzer
    b. Stress test
    c. Fecal coliform

22. The goal of the Water Reclamation Facility is to recycle what % of wastewater?
    a. 53%
    b. 66%
    c. 100%

23. What stage of treatment consists of screening and grit removal?
    a. Disinfection
    b. Preliminary
    c. Secondary

24. Why are blowers important?
    a. To provide dissolved oxygen and mixing
    b. To provide oxygen to the operators
    c. To keep operators awake

25. During secondary treatment the bugs use _____ and _____ to grow.
    a. oxygen, food
    b. water, bleach
    c. acid, rain

26. What is "pathogenic"?
    a. Causing hunger
    b. Being angry
    c. Causing disease

27. The belt presses use what to separate water from the solids?
    a. WD40
    b. Polymer
    c. Oil